BODY, DECALS - Z26S4D92AN/BN (901736)

2026 RZR - RZR PRO S4 ULTIMATE (R01) - Z26S4D92AN/AH/BN/BH

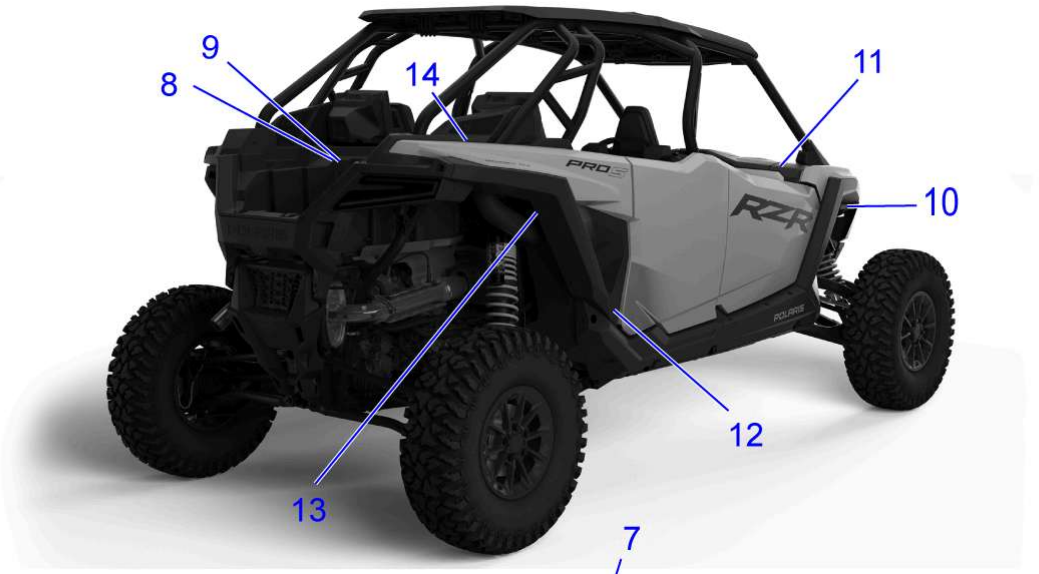

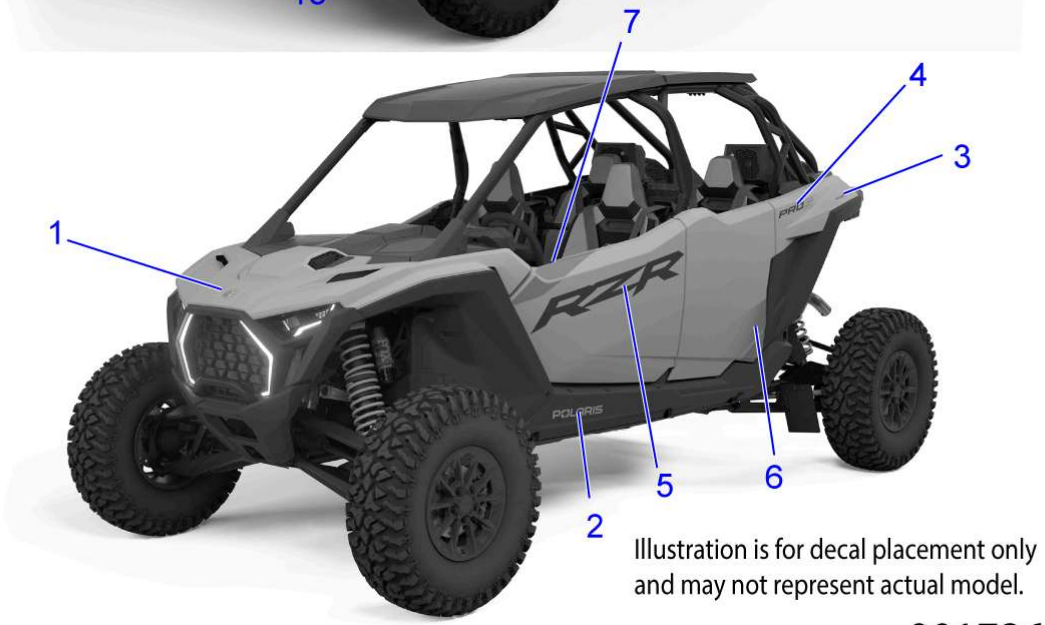

Illustration is for decal placement only and may not represent actual model.

© 2025 Polaris Industries Inc.

901736

Reference #	Part#	Description	Quantity
1	5270256	BADGE-POLARIS STAR LG	1
2	7198599	DECAL-POLARIS-TITANIUM	2
3	7203314	DECAL-RR.FNDR,UPR,DYNAMIX,LH	1
3	7203315	DECAL-RR.FNDR,UPR,DYNAMIX,RH	1
4	7203352	DECAL-RR.FNDR,PROS,LH	1
4	7203353	DECAL-RR.FNDR,PROS,RH	1
5	7203354	DECAL-DOOR,MID,RZR,LH	1
5	7203355	DECAL-DOOR,MID,RZR,RH	1
6	7203356	DECAL-RR.DOOR,LWR,LH	1
6	7203357	DECAL-RR.DOOR,LWR,RH	1
7	7301009	DECAL-WARN,DRIVER INFORMATION	1
8	7300842	DECAL-WARN,PFC	1
9	7301374	DECAL-WARN,TIRE PRESSURE	1
10	2636503	ASM-REFLECTOR,AMBER W/VHB TAPE	2

11	7301010	DECAL-WARN,PASSENGER INFORMATION	1
12	7301178	DECAL-FUEL RECOMMENDATION [BESIDE FUEL CAP]	1
13	7196804	DECAL-REFLECTOR,RED	2
14	7300168	DECAL-WARN,REAR SEAT	2

Copyright 1996-2026 Polaris Industries U.S.A All rights reserved.